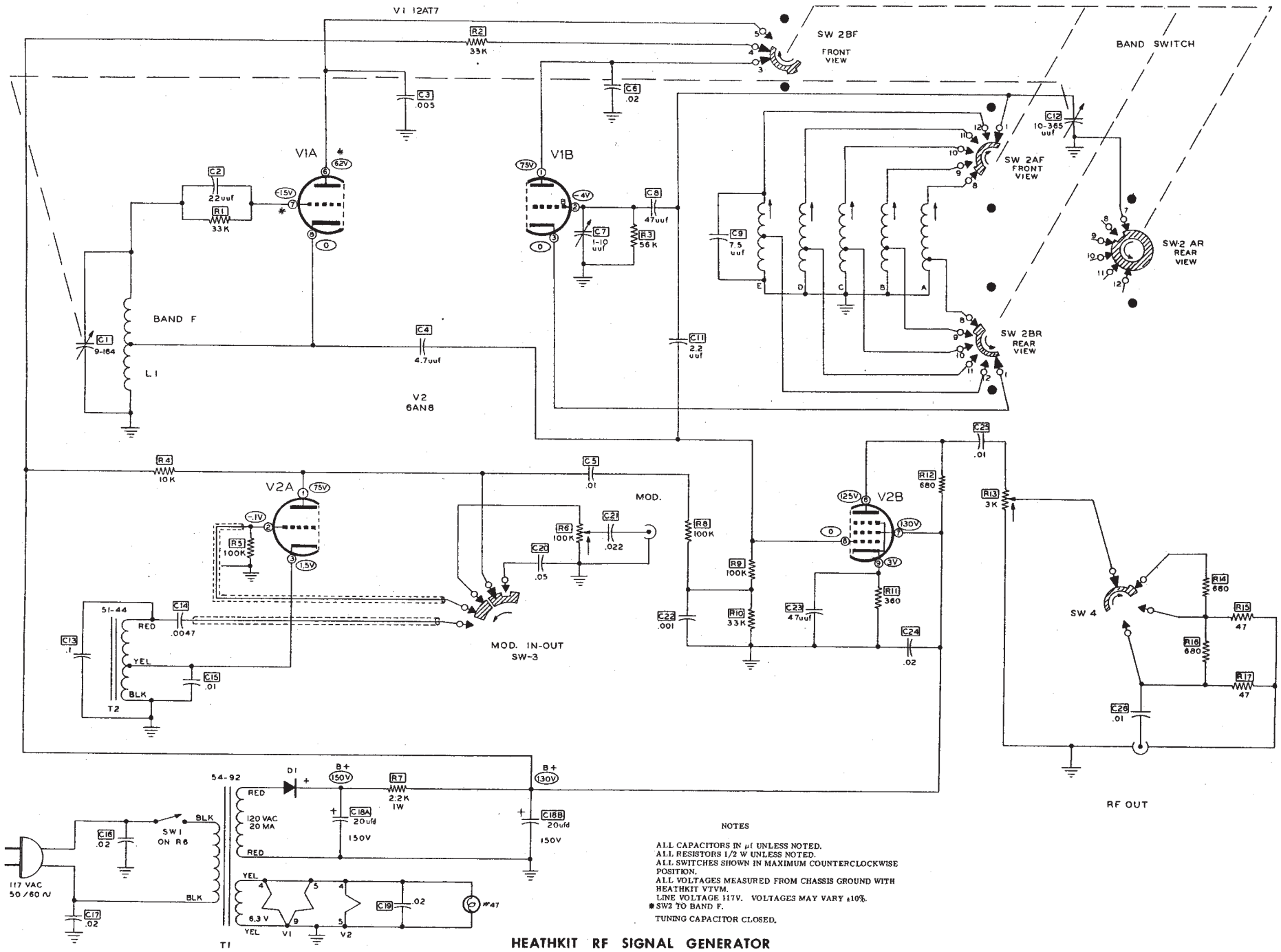

NOTES

ALL CAPACITORS IN μf UNLESS NOTED.
ALL RESISTORS 1/2 W UNLESS NOTED.
ALL SWITCHES SHOWN IN MAXIMUM COUNTERCLOCKWISE POSITION.
ALL VOLTAGES MEASURED FROM CHASSIS GROUND WITH HEATHKIT VTVM.
LINE VOLTAGE 117V. VOLTAGES MAY VARY ±10%.
*SW2 TO BAND F.
TUNING CAPACITOR CLOSED.

HEATHKIT RF SIGNAL GENERATOR

MODEL RF-1